Czochralski method

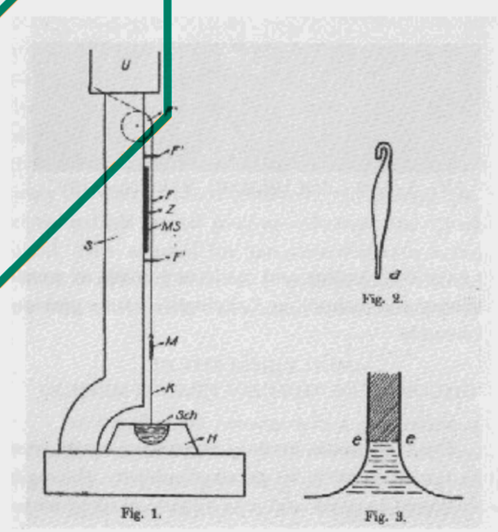

Scheme for Czochralski method from his original work in 1916

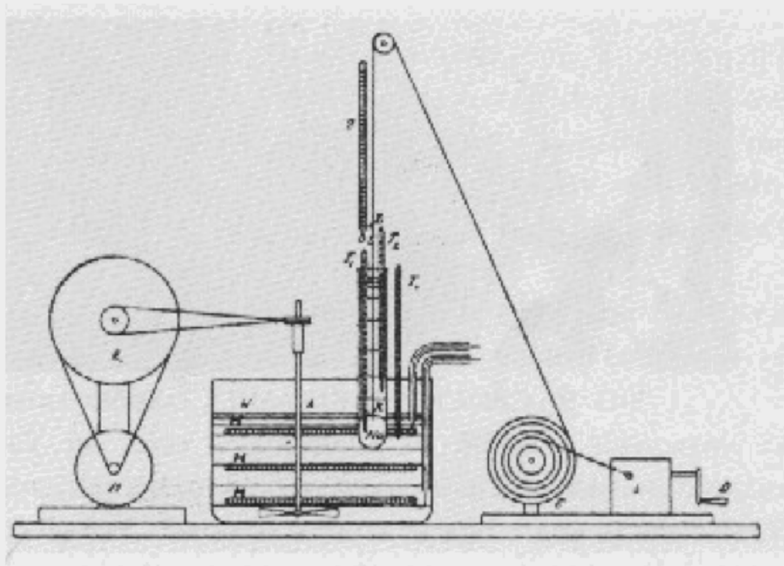

Drawing from the work on measuring the pace of sodium crystallisation in 1936

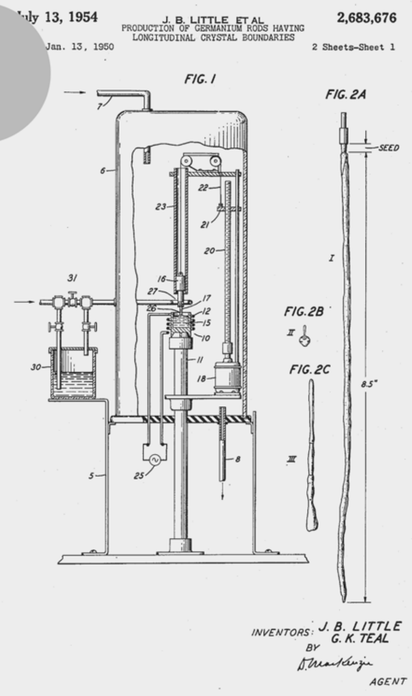

Schemes of the device of J.B. Little and G.K. Teal from the first American patents

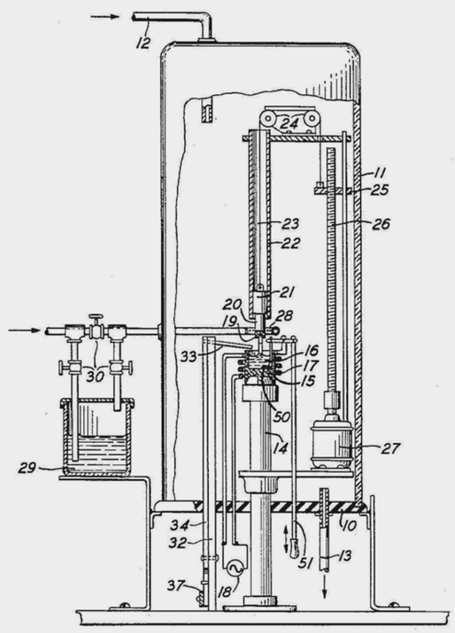

The scientific method later called "Czochralski method" was discovered by accident, but it would never have been developed without thorough research and laboratory observations. Czochralski kept repeating the experiment in 1916 in the AEG concern laboratory, this time on purpose, and the effect was always the same. This could not be an accident. Maybe the length of the thread depended on the speed with which he pulled the nib out of the crucible? Apparently, the faster the nib was removed, the shorter the thread. Moreover, the thread was a single crystal, **a monocrystal**. Jan Czochralski constructed an instrument to scientifically measure this phenomenon. He replaced the nib with a glass pipe – capillary tube, and instead of pulling it with a hand, he used a clock mechanism. After melting, the surface of the material was cooled down to the solidification temperature. A capillary tube or a monocrystal (seed crystal) was introduced into this surface. When it was being pulled out at a special pace to prevent the breaking of the thread, numerous layers of atoms adhered to it and solidified forming a crystal.

Czochralski method has had a fundamental significance for the development of electronics, and its creator is considered to be a father of electronic science. It is also being used now – after almost 100 years! – to produce silicon monocrystals, the main component of semiconductors. Czochralski never patented his method, and the name which it bears now was given to it by Americans.

Device for the creation of silicon monocrystals

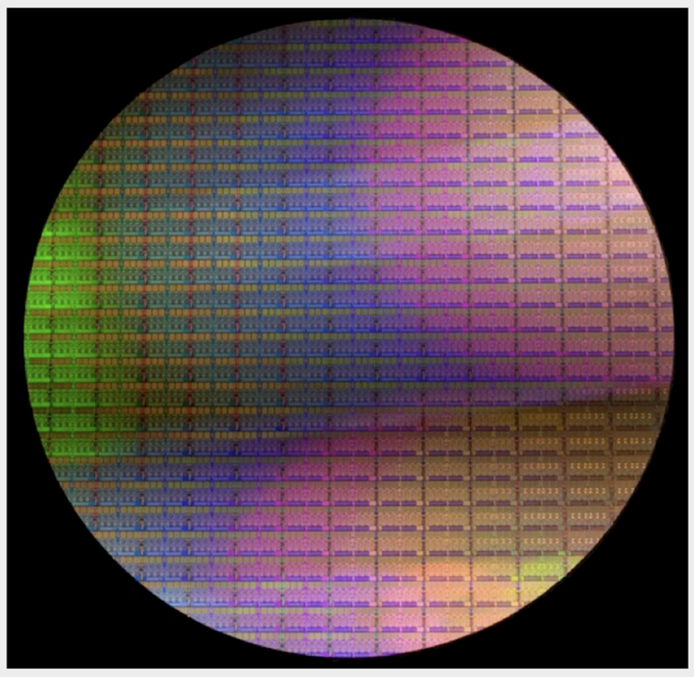

Silicon wafer with integrated circuits

Single crystal of silicone